INSTALLATION, SERVICE AND MAINTENANCE INSTRUCTIONS

PORTABLE AGITATOR

PBC

Original Manual
20.004.30.01EN
(B) 2024/08

EC Declaration of Conformity

INOXPA S.A.U.
Telers, 60
17820 - Banyoles (Spain)

hereby declare under our sole responsibility that the

Machine:	**PORTABLE AGITATOR**
Model:	**PBC**
Serial number:	**IXXXXXXXXX** to **IXXXXXXXXX** **XXXXXXXXXIINXXX** to **XXXXXXXXXIINXXX**

fulfils all the relevant provisions of the following directive:

Machinery Directive 2006/42/EC
Directive 2011/65/EU on the restriction of the use of certain hazardous substances in electrical and electronic equipment

and with the following harmonized standards:

EN ISO 12100:2010
EN 60204-1:2018
EN IEC 63000:2018

The technical file has been prepared by the signer of this document.

David Reyero Brunet
Technical Office Manager
25th June 2024

Document: 20.004.30.03EN
Revision: (A) 2024/06

Declaration of Conformity

INOXPA S.A.U.
Telers, 60
17820 - Banyoles (Spain)

hereby declare under our sole responsibility that the

Machine:	**PORTABLE AGITATOR**
Model:	**PBC**
Serial number:	**IXXXXXXXXX** to **IXXXXXXXXX** **XXXXXXXXXIINXXX** to **XXXXXXXXXIINXXX**

fulfils all the relevant provisions of these regulations:

Supply of Machinery (Safety) Regulations 2008
The Restriction of the Use of Certain Hazardous Substances in Electrical and Electronic Equipment Regulations 2012 (as amended)

and with the following designated standards:

EN ISO 12100:2010
EN 60204-1:2018
EN IEC 63000:2018

The technical file has been prepared by the signer of this document.

David Reyero Brunet
Technical Office Manager
25th June 2024

UK CA

Document: 20.004.30.04EN
Revision: (A) 2024/06

1. Table of Contents

1. Table of Contents

2. Generalities

2.1. Instructions manual 5

2.2. Compliance with the instructions 5

2.3. Warranty 5

3. Safety

3.1. Warning symbols 6

3.2. General safety instructions 6

4. General Information

4.1. Description 8

4.2. Operating principle 8

4.3. Application 8

5. Installation

5.1. Reception of the agitator 9

5.2. Identification of the agitator 9

5.3. Transport and storage 10

5.4. Location 11

5.5. Electrical installation 12

5.6. Assembly 12

6. Start-up

7. Troubleshooting

8. Maintenance

8.1. General considerations 16

8.2. Maintenance 16

8.3. Lubrication 16

8.4. Spare parts 16

8.5. Conservation 16

8.6. Disassembly and assembly of the agitator 17

9. Technical Specifications

9.1. Materials 18

9.2. Other features 18

9.3. Weight of the PBC portable agitator 18

9.4. Dimensions of the PBC portable agitator 19

9.5. Exploded drawing and parts list of the PBC portable agitator 20

2. Generalities

2.1. INSTRUCTIONS MANUAL

This manual contains information about the reception, installation, operation, assembly, disassembly and maintenance of the PBC portable agitator.

Carefully read the instruction prior to starting the agitator, familiarize yourself with the installation, operation and correct use of the agitator and strictly follow the instructions. These instructions should be kept in a safe location near the installation area.

The information published in the instruction manual is based on updated data.

INOXPA reserves the right to modify this instruction manual without prior notice.

2.2. COMPLIANCE WITH THE INSTRUCTIONS

Not following the instructions may impose a risk for the operators, the environment and the machine, and may result in the loss of the right to claim damages.

This non-compliance may result in the following risks:

- Failure of important machine/plant functions.
- Failure of specific maintenance and repair procedures.
- Possible electrical, mechanical and chemical hazards.
- Risk to the environment due to the type of substances released.

2.3. WARRANTY

Any warranty will be void immediately and lawfully and, additionally, INOXPA will be compensated for any civil liability claims submitted by third parties, in the following cases:

- The service and maintenance work have not been carried out in accordance with the service instructions, the repairs have not been carried out by our personnel or have been carried out without our written authorisation.
- Modifications have been carried out on our material or equipment without written authorisation.
- The parts or lubricants used are not original INOXPA parts and products.
- The material or equipment has been improperly used, has been used negligently, or has not been used according to the instructions and their intended.

The General Conditions of Delivery already in your possession are also applicable.

The machine may not undergo any modification without prior approval from the manufacturer. For your safety, only use original spare parts and accessories.

The usage of other parts will relieve the manufacturer of any liability.

Changing the service conditions can only be carried out with prior written authorization from INOXPA.

Please do not hesitate to contact us in case of doubts or if further explanations are required regarding specific data (adjustments, assembly, disassembly, etc.).

3. Safety

3.1. WARNING SYMBOLS

Safety hazard for people in general and/or for equipment

Electric hazard

ATTENTION Important instruction to prevent damage to the equipment and its functions

3.2. GENERAL SAFETY INSTRUCTIONS

Read the instruction manual carefully before installing and starting the agitator. Contact INOXPA in case of doubt.

3.2.1. During the installation

The Technical Specifications of chapter 9 should always be observed.

The installation and use of the agitator should always be in accordance with applicable regulations in regard to health and safety.

Before starting up the agitator, check that it is properly anchored and its shaft is perfectly aligned. Incorrect alignment and/or excessive stress during coupling can cause serious mechanical problems in the agitator.

Take all possible precautions when lifting the agitator. Always use properly attached slings when moving the agitator with a crane or other lifting device.

Keep the motor and the switchboard under control, particularly in areas where there is a risk of fire or explosion.

When cleaning, do not spray directly on the engine.

Do not disassemble the agitator until the switchboard has been disconnected. Remove the fuses and disconnect the power cable supplying the motor.

All electric work should be carried out by specialised personnel.

3.2.2. During operation

The Technical Specifications of chapter 9 should always be observed. Under no circumstances can the specified limit values be exceeded.

Before starting up the agitator, remove all the tools used during the assembly.

Do not operate the agitator when the rotating parts are not equipped with their guards or are not properly assembled.

The agitator has rotating parts. Do not place hands or fingers in the agitator while it is operating. This may cause serious injuries.

Do not touch the parts of the agitator that are in contact with the fluid when in operation. When the agitator operates with hot fluids (temperatures above 50ºC), there is a risk of skin burning. In such cases, collective-protection means (in this order or priority: separation, protective screen, heat-insulating material) or, in the absence of this, individual protection gear (gloves) must be used.

The agitator and its installation can generate sound levels above 85 dB(A) under unfavourable operating conditions. In such cases, the operators must use devices for protection against noise.

3.2.3. During maintenance

The Technical Specifications of chapter 9 shall always be observed.

The agitator cannot operate without fluid. Standard agitators are not designed to work during the filling or emptying of tanks.

The maximum operating conditions of the agitator should not be exceeded. Nor should the operating parameters for which the agitator was initially designed be modified without written authorisations from INOXPA.

Do not leave loose parts on the floor.

Do not disassemble the agitator until the switchboard has been disconnected. Remove the fuses and disconnect the power cable supplying the motor.

All the electric work should be carried out by specialised personnel.

4. General Information

4.1. DESCRIPTION

The PBC series agitators are vertical direct motor-driven agitators with clamp. There is a single size motor standard for all the series' models. In spite of being very compact, these agitators have a bearing support that is completely independent of the motor. This support is fixed onto the tank with a clamp that can be turned in all directions. The half shaft is guided by two bearings that support the axial and radial forces transmitted by the agitation elements. The agitator shaft is attached directly to the half shaft with two allen pins

4.2. OPERATING PRINCIPLE

These agitators are fixed to the wall of the tank by means of a clamp, thanks to the joint, they can be inclined to the required position.

The rotation of the propeller makes the fluid flow to the bottom of the tank and then up to the surface of the product along the tank wall opposite to the wall the agitator is fitted to. This effect is promoted if the bottom of the tank is curved.

4.3. APPLICATION

The PBC series agitators are widely used in processes of mixing, dissolutions, dispersion and maintenance whenever powerful and high-speed agitation is required in the food processing, cosmetics, pharmaceutical or chemical industries.

The agitators can be fitted to small tanks of up to 1 500 litres for work with low-viscosity products.

Each agitator has performance limits. The agitator was selected for a given set of mixing conditions when the order was placed. INOXPA shall not be held responsible for any damage that might be suffered or malfunctioning of the equipment of the information provided by the buyer is incomplete or incorrect. (e.g. nature of the fluids or installation details).

5. Installation

5.1. RECEPTION OF THE AGITATOR

INOXPA is not liable for any deterioration of the material caused by its transport or unpacking. Visually check that the packaging has not been damaged.

If the agitator is supplied without a drive or other element, the purchaser shall be responsible for its assembly, installation, start-up and operation.

When receiving the agitator, check the packaging and its content to ensure that it matches the delivery note. INOXPA packs the agitators in their fully assembled form or disassembled on a case-by-case basis. Ensure that the agitator has not been damaged in any way. If it is not in good condition and/or any parts are missing, the carrier must submit a report as soon as possible.

The following documentation is included with the agitator:

- shipping documents,
- instructions and Servicing manual for the agitator,
- instructions and Servicing manual for the gear-motor when the agitator is supplied with a motor by INOXPA.

5.2. IDENTIFICATION OF THE AGITATOR

The agitator is identified using a rating plate fixed onto the motor. The type of agitator and the serial number appear on the nameplate.

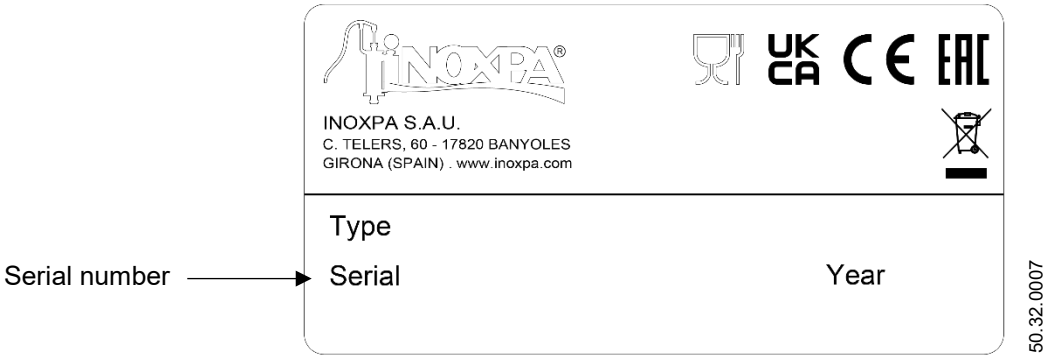

PBC	1.	18 -	4	007 -	1 -	150
						Diameter of the agitation element
						100 100 mm
						130 130 mm
						150 150 mm
					Motor	
					1 IP-55	
					2 IP-65	
					3 Flameproof	
					4 Explosion-proof	
					5 Single phase	
				Motor power		
				001 0,18 kW		
				005 0,55 kW		
				007 0,75 kW		
			Motor speed			
			4 poles 1 500 rpm			
			6 poles 1 000 rpm			
			8 poles 750 rpm			
		Type of agitation elements				
		18 Type lineflux				
	Number of agitation elements					
	1 One agitation element					
	2 Two agitation elements					
Name of the agitator						
PBC Portable agitator with motor						

5.3. TRANSPORT AND STORAGE

ATTENTION

According to the model, the agitators are too heavy to be stored or installed manually. Use an appropriate mode of transport. Do not handle the agitator by the shaft as this may become deformed.

ATTENTION

Take all possible precautions when lifting the agitator. Always use properly attached slings when moving the agitator with a crane or other lifting device.

If the agitator is not to be installed immediately, it must be stored in an appropriate place. The shaft must be stored in a horizontal position and placed on wooden supports or for a similar material. In this position, the shaft will not become deformed but it must not be subject to any type of load.

5.4. LOCATION

Place the agitator in such a way as to facilitate inspections and checks. Leave enough room around the agitator for service, disassembly and maintenance operations. It is very important to be able to access the electric connection device of the agitator, even when in operation.

The agitator is attache to the tank by means of a clamp and it has to have a base that is sufficiently rigid to prevent any kind of vibrations.

The agitator must be placed with an appropriate inclination, as shown is following figure, to obtain the flow required and so that the propeller does not touch the tank's wall.

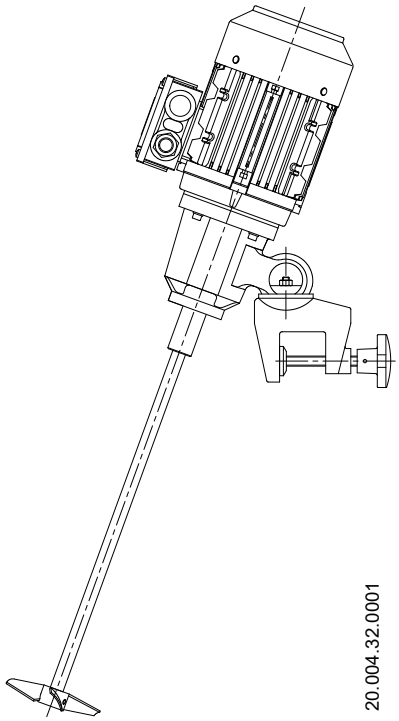

The design of the gag, with a swivel ball and socket joint, allows for a triple mixing action. Fixing the agitator with the correct angle for the required mixing is instantaneous and a tried and tested mixing result can be recorded and reproduced with the three positions. See the following figure:

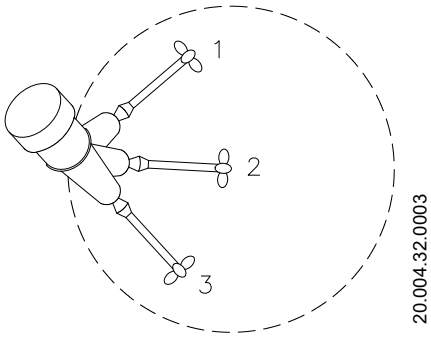

1. **Decentred position right.** This is the most recommendable. Intense up and down currents are obtained with a simultaneous rotation, which blend the products thoroughly. The currents of the propellers sweep the bottom, maintaining the solids in suspension.
2. **Centred position.** With the shaft centred, the forces are balanced, creating an eddy or a vortex. This position is good for dragging solid particles with a tendency to float down to the bottom, but it is not effective for general mixing.
3. **Decentred position left.** With the agitator shaft in this quadrant, there is a large slipstream without a vortex and with few vertical currents. It is recommended for the inclusion of liquid gases.

5.5. ELECTRICAL INSTALLATION

Before connecting the electrical motor to the mains, check local regulations on electrical safety as well as the applicable standards.

Check the instructions manual of the manufacturer of the motor for information on how to connect it to the mains.

Take the connection of the electrical motors must be performed by qualified personnel.

Take the appropriate measures to prevent any fault.

The motor must be provided with devices for protection against power overload and short-circuits.

The agitator cannot be used in areas where there is a risk of fire or explosion when this has not been specified in the order.

5.6. ASSEMBLY

After the agitator's location has been defined, it has to be fixed to the tank with the gag (72), fastening the knob (74) tightly until it butts with the tank. In order to put the agitator in the correct position for the required work, the hexagonal nut has to be loosened (54) and after it has been orientated, it has to be secured tightly.

Be careful when assembling the shaft not to hit or strain it so as to avoid it being bent.

ATTENTION

Force should never be applied to the end of the agitator shaft, as it can easily suffer permanent damage.

ATTENTION

Check the alignment of the agitator shaft with the half shaft once its assembly is completed.

6. Start-up

The start-up of the agitator can be carried out provided the instructions indicated in the chapter 5. Installation have been followed.

- Check that the power supply matches the rating indicated on the motor plate.
- Check the alignment of the agitator shaft.
- Check the level of fluid in the tank. When not specified in the order, the agitator cannot be operated during the filling or emptying of the tank.

ATTENTION

The agitator can NEVER operate without fluid. The agitation elements may only be submerged to a height equal to 1,5 times its diameter.

- All the guards must be in place.
- Start up the agitator.
- Check that the direction of rotation of the propellers is correct (it must rotate clockwise when see form the drive side). See the next figure:

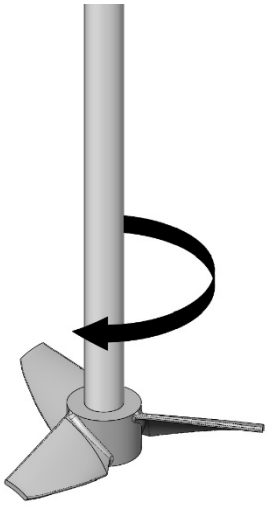

Follow the direction of rotation of the agitation components as indicated by the arrow attached to the engine. An incorrect direction of rotations results in a loss of agitation performance.

- Check the electrical consumption of the motor.

ATTENTION

Do not modify the operating parameters for which the agitator was initially designed without written authorisation from INOXPA (risk of damage and user hazard).

Follow the instructions for use and the safety requirements described in the instructions manual for the tank in which the agitator is mounted.

Mechanical risks (e.g. drag, shear, cutting, impact, flattening and pinching). If the agitation element is accessible from the top or the tank inspections hatch, then the user will be exposed to the above-mentioned risks.

The tank must be fitted with protective devices and safety equipment. Consult the manufacturer's instructions manual.

ATTENTION

Introducing an object or solid raw material may cause the agitation component and other mechanical parts to break and compromise its safety or guarantee.

7. Troubleshooting

The attached table lists solutions to problems that may arise while operating the agitator. It is assumed that the agitator has been properly installed and that is has been selected correctly for the specific application.

Contact INOXPA if technical assistance is required.

Motor overload	Insufficient agitation	Vibrations and noise	Leaks	PROBABLE CAUSES	SOLUTIONS
•	•			Viscosity of the liquid too high	Reduce the viscosity, e.g. by heating the liquid
•				High density	Increase motor power
	•			Tank too big for the chosen agitator	Check with the technical department
	•			Wrong direction of rotation	Change direction of rotation
	•			Agitator speed too low	Increase the speed
		•		Liquid level insufficient or none	Check liquid level in the tank
		•		Shaft bended	Replace the shaft
		•		Critical speed	Check with the technical department
		•		Worn bearings	Replace the bearings agitator
			•	Lip seal worn or damaged	If the lip seal is worn, replace it. If the lip seal is damaged, consult the technical department.

If the problems persist stop using the agitator immediately. Contact the agitator manufacturer or the representative.

8. Maintenance

8.1. GENERAL CONSIDERATIONS

This agitator, just like any other machine, requires maintenance. The instructions contained in this manual cover the identification and replacement of spare parts. The instructions are aimed at maintenance personnel and those responsible for the supply of spare parts.

Carefully read chapter 9. Technical Specifications.

Maintenance work can only be carried out by qualified personnel that are trained and equipped with the necessary resources to carrying out this work.

Before beginning maintenance work, ensure that the electric motor is disconnected and that the tank is empty.

All parts or materials that are replaced must be properly disposed of/recycled in accordance with the current directives applicable in each area.

Before beginning maintenance work, ensure that the agitator is disconnected.

The symbol indicates that the product should not be discarded as unsorted waste but must be sent to separate collection facilities for recovery and recycling.

8.2. MAINTENANCE

- Inspect the agitator regularly.
- Do not fail to keep the agitator clean.
- Check the state of the motor or the gear motor.
- Check the state of the bearings.
- Check the lip seal.

Motor or gear motor maintenance shall be carried out in accordance with the manufacturer's instructions, see the instructions manual.

8.3. LUBRICATION

The PBC portable agitators are mounted on permanently greased bearings, which do not need maintenance. The bearings can be re-greased by stripping the support, cleaning the previous grease off the bearings or by replacing them. The bearing houses are also cleaned and finally re-greased with a 50% - 70% grease.

When re-greasing, use only special grease for ball bearings with the following properties:

- Lithium-based or made up of high-quality lithium,
- Viscosity 100-140 cSt at 40ºC,
- Consistency NLGI grade 2 or 3,
- Continuous work temperature -30ºC to 120ºC.

The lubrication of the bearings of the motor or the gear motor will be carried out according to the manufacturer's instructions.

8.4. SPARE PARTS

To order spare parts it is necessary to indicate the type and serial number included on the agitator's characteristics plate, as well as the position and description of the part as found in chapter 9. Technical Specifications.

8.5. CONSERVATION

If the agitator is out of service for a considerable period of time, clean and treat the parts with VG46 mineral oil. The shaft must be stored in the horizontal position and on wooden supports or on supports of a similar material.

8.6. DISASSEMBLY AND ASSEMBLY OF THE AGITATOR

The disassembly and assembly of the agitators should only be carried out by qualified personnel using only appropriate tools. Ensure that staff read these instructions manual attentively, particularly the instructions that relate to their work.

Stop the motor from starting up when carrying out assembly and disassembly work on the agitator.
Place the agitator switch in the “off” position.
Lock out the electrical switchboard or place a warning sign.
Remove the fuses and take them to the workplace.

8.6.1. Disassembly of the agitator

Once the motor has been disconnected, disassembly work of the agitator may begin:

- Take the agitator out of the tank.
- Disassemble the propeller (02) and the agitator shaft (05) removing their respective allen pins (55,55A).
- Remove the allen screws (51) and take out the motor or gear motor.
- Release the elastic ring (66) with appropriate pliers. Hit the lower end of the head half shaft (26) with a nylon hammer and take out the unit formed by the head half shaft and the ball bearings (70,70A).
- Remove the lip seal (88) which is housed in the bottom part of the head (06).

8.6.2. Assembly of the agitator

- Insert the seal (88) into the head (06).
- Put the upper ball bearings (70) and the lower ones (70A) in the head half shaft (26).
- After the half shaft-ball bearing unit has been assembled put it in the head until it butts below with the lower ball bearings and fix the unit with the elastic ring (66).
- Place the motor or gear motor (93) and tighten the allen screws (51) and the flat washers (53) that hold it in place.
- Join the agitator shaft (05) with the head half shaft using the allen pins (55A).
- Place the propeller (02) in the agitator shaft and tighten the allen pins (55).
- Fit the agitator over the tank

9. Technical Specifications

9.1. MATERIALS

Parts in contact with the product	AISI 316L
Lip seal	NBR
Surface finish	Ra > 1,6 µm

9.2. OTHER FEATURES

Motor	T80
Speed (rpm)	1 415 - 900
Maximum power	0,75
Maximum shaft length (mm)	1 250
Maximum shaft diameter (mm)	16
Propeller diameter (mm)	150
Propeller	Lineflux

9.3. WEIGHTS OF THE PBC PORTABLE AGITATOR

Type agitator	Weight (kg)
PBC 1.18-4007-1-100	16,0
PCB 1.18-4007-1-130	16,0
PBC 1.18-4007-1-150	16,0
PBC 1.18-6005-1-130	16,5
PBC 1.18-6005-1-150	16,5

9.4. DIMENSIONS OF THE PBC PORTABLE AGITATOR

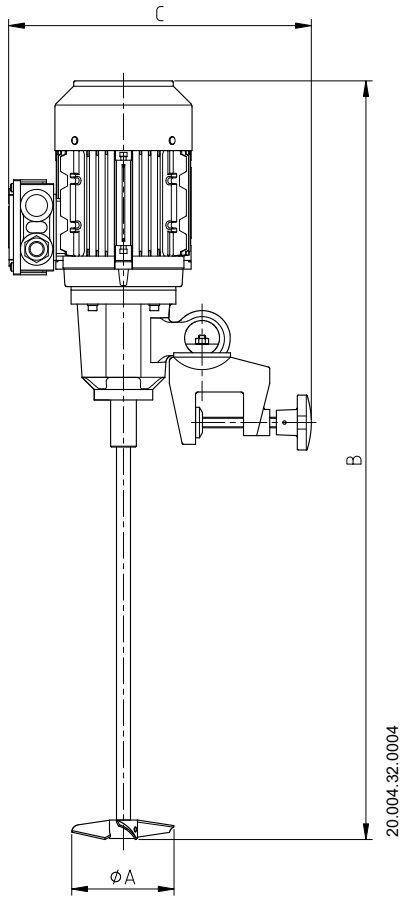

Type agitator	Dimensions (mm)		
	A	B	C
PBC 1.18-4007-1-100	100	1 664	400
PCB 1.18-4007-1-130	130	1 664	400
PBC 1.18-4007-1-150	150	1 664	400
PBC 1.18-6005-1-130	130	1 664	400
PBC 1.18-6005-1-150	150	1 664	400

9.5. EXPLODED DRAWING AND PARTS LIST OF THE PBC PORTABLE AGITATOR

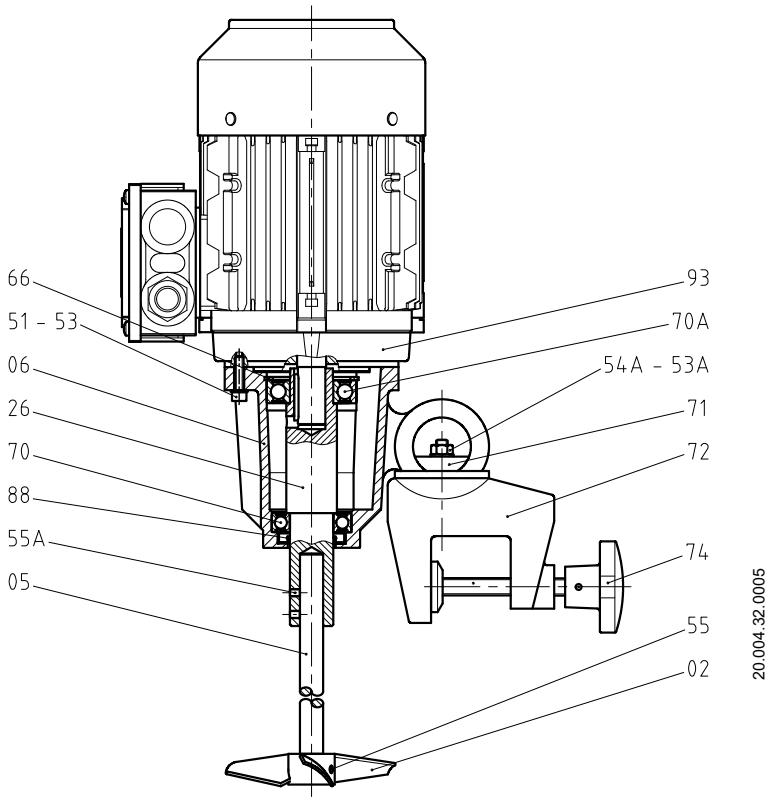

Position	Description	Quantity	Material
02	Propeller	1	AISI 316
05	Agitator shaft	1	AISI 316
06	Head	1	Aluminium
26	Head half shaft	1	AISI 316
51	Allen screw	4	A2
53	Flat washer	4	A2
53A	Flat washer	1	A2
54A	Hexagonal nut	1	A2
55	Allen pin	2	A2
55A	Allen pin	2	A2
66	Elastic ring	1	Steel
70	Ball bearings	1	Steel
70A	Ball bearings	1	Steel
71	Clamp	1	Aluminium
72	Gag	1	Aluminium
74	Knob	1	Plastic
88	Seal	1	NBR
93	Motor / Gear motor	1	-

NOTES

NOTES

NOTES

How to contact INOXPA S.A.U.:
Contact details for all countries are
continually updated on our website.
Please visit www.inoxpa.com to access the information.

INOXPA S.A.U.
Telers, 60 – 17820 – Banyoles – Spain
Tel.: +34 972 575 200 – Fax: +34 972 575 502

20.004.30.01EN · (B) 2024/08